* 0000800000001 *

Cambridge Assessment International Education

Cambridge International AS & A Level

CANDIDATE NAME

CENTRE NUMBER

CANDIDATE NUMBER

5942866629

PHYSICS **9702/22**

Paper 2 AS Level Structured Questions **October/November 2024**

1 hour 15 minutes

You must answer on the question paper.

No additional materials are needed.

INSTRUCTIONS

- Answer **all** questions.
- Use a black or dark blue pen. You may use an HB pencil for any diagrams or graphs.
- Write your name, centre number and candidate number in the boxes at the top of the page.
- Write your answer to each question in the space provided.
- Do **not** use an erasable pen or correction fluid.
- Do **not** write on any bar codes.
- You may use a calculator.
- You should show all your working and use appropriate units.

INFORMATION

- The total mark for this paper is 60.
- The number of marks for each question or part question is shown in brackets [ ].

This document has **16** pages. Any blank pages are indicated.

© UCLES 2024

[Turn over

Data

acceleration of free fall	g	=	$9.81\ \text{m s}^{-2}$
speed of light in free space	c	=	$3.00 \times 10^{8}\ \text{m s}^{-1}$
elementary charge	e	=	$1.60 \times 10^{-19}\ \text{C}$
unified atomic mass unit	1 u	=	$1.66 \times 10^{-27}\ \text{kg}$
rest mass of proton	m_p	=	$1.67 \times 10^{-27}\ \text{kg}$
rest mass of electron	m_e	=	$9.11 \times 10^{-31}\ \text{kg}$
Avogadro constant	N_A	=	$6.02 \times 10^{23}\ \text{mol}^{-1}$
molar gas constant	R	=	$8.31\ \text{J K}^{-1}\ \text{mol}^{-1}$
Boltzmann constant	k	=	$1.38 \times 10^{-23}\ \text{J K}^{-1}$
gravitational constant	G	=	$6.67 \times 10^{-11}\ \text{N m}^2\ \text{kg}^{-2}$
permittivity of free space	ε_0	=	$8.85 \times 10^{-12}\ \text{F m}^{-1}$
	$(\frac{1}{4\pi\varepsilon_0}$	=	$8.99 \times 10^{9}\ \text{m F}^{-1})$
Planck constant	h	=	$6.63 \times 10^{-34}\ \text{J s}$
Stefan–Boltzmann constant	σ	=	$5.67 \times 10^{-8}\ \text{W m}^{-2}\ \text{K}^{-4}$

Formulae

uniformly accelerated motion	s	=	$ut + \frac{1}{2}at^2$
	v^2	=	$u^2 + 2as$
hydrostatic pressure	Δp	=	$\rho g \Delta h$
upthrust	F	=	$\rho g V$
Doppler effect for sound waves	f_o	=	$\frac{f_\text{s} v}{v \pm v_\text{s}}$
electric current	I	=	$Anvq$
resistors in series	R	=	$R_1 + R_2 + ...$
resistors in parallel	$\frac{1}{R}$	=	$\frac{1}{R_1} + \frac{1}{R_2} + ...$

DO NOT WRITE IN THIS MARGIN
DO NOT WRITE IN THIS MARGIN
DO NOT WRITE IN THIS MARGIN
DO NOT WRITE IN THIS MARGIN
DO NOT WRITE IN THIS MARGIN

1 **(a)** State what is meant by a vector quantity.

.....

..... [1]

(b) A sphere falls vertically through a liquid that has density 830 kg m^{-3}. The sphere has radius r and constant velocity v, as shown in Fig. 1.1.

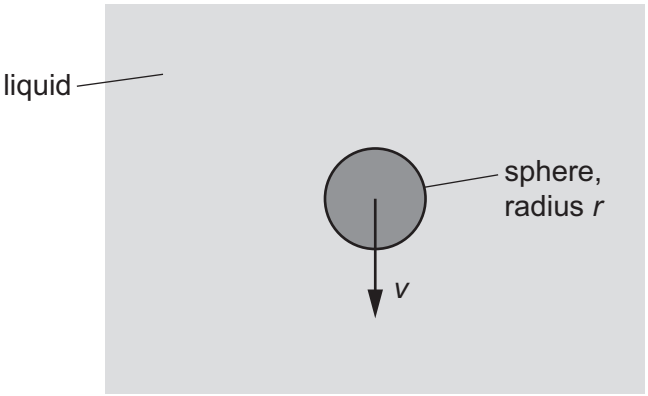

Fig. 1.1

(i) The drag force D acting on the sphere is given by

$$D = 6\pi r\eta v$$

where η is a property of the liquid.

Determine the SI base units of η.

SI base units ..... [3]

(ii) State an equation showing the relationship between the magnitudes of the weight W, drag force D and upthrust U acting on the sphere.

..... [1]

DO NOT WRITE IN THIS MARGIN
DO NOT WRITE IN THIS MARGIN
DO NOT WRITE IN THIS MARGIN
DO NOT WRITE IN THIS MARGIN
DO NOT WRITE IN THIS MARGIN

(iii) The volume of the sphere is 4.6 cm^3. The drag force D is 0.32 N.

Calculate the weight of the sphere.

weight = ... N [2]

[Total: 7]

DO NOT WRITE IN THIS MARGIN
DO NOT WRITE IN THIS MARGIN
DO NOT WRITE IN THIS MARGIN
DO NOT WRITE IN THIS MARGIN
DO NOT WRITE IN THIS MARGIN

2 **(a)** Define momentum.

.....

..... [1]

(b) A child stands on a scooter on horizontal ground. The combined mass of the child and the scooter is 16 kg.
The child starts from rest and pushes once on the ground with her foot which causes her to accelerate. The push lasts for a time of 1.1 s. The speed of the child and the scooter after the push is $0.60\,m\,s^{-1}$.

Determine the average resultant force acting horizontally on the child and the scooter during the push.

average force = ... N [2]

(c) Later, the child in **(b)** travels down a slope at a constant angle to the horizontal, as shown in Fig. 2.1.

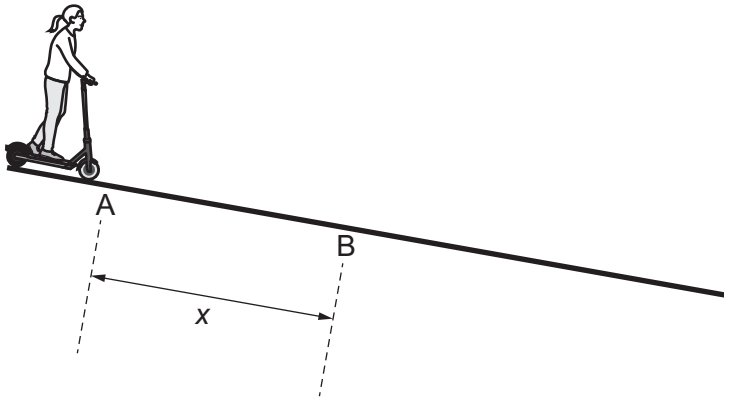

Fig. 2.1 (not to scale)

At point A her speed is $0.60\,m\,s^{-1}$. She has a constant acceleration of $0.85\,m\,s^{-2}$ parallel to the slope. After a time of 3.7 s, she reaches point B.

Calculate the distance x travelled by the child along the slope from A to B.

x = ... m [2]

DO NOT WRITE IN THIS MARGIN

(d) At point B, the child in **(c)** applies the brake with a constant force to maintain a constant velocity. Point C is 18 m from point B, as shown in Fig. 2.2.

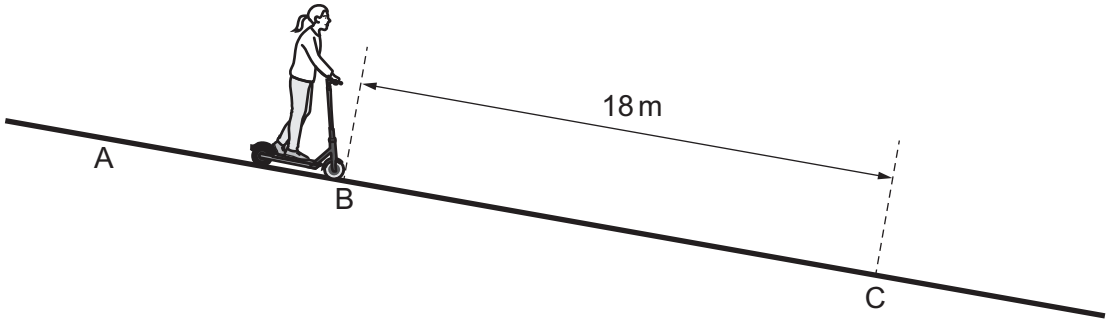

Fig. 2.2 (not to scale)

The work done by the braking force between B and C is 250 J.

(i) Determine the magnitude of the braking force.

force = ... N [2]

(ii) On Fig. 2.3, sketch the variation of the kinetic energy of the child and scooter with distance travelled from point A to point C.
Numerical values for kinetic energy are not required.

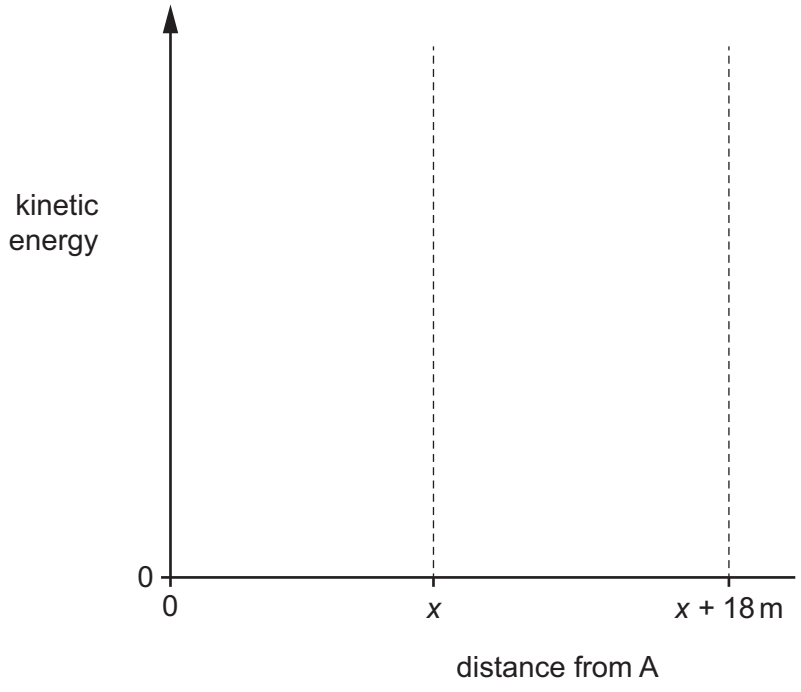

Fig. 2.3

[3]

[Total: 10]

DO NOT WRITE IN THIS MARGIN
DO NOT WRITE IN THIS MARGIN
DO NOT WRITE IN THIS MARGIN
DO NOT WRITE IN THIS MARGIN
DO NOT WRITE IN THIS MARGIN

3 **(a)** The variation of stress with strain for a metal P is shown in Fig. 3.1.

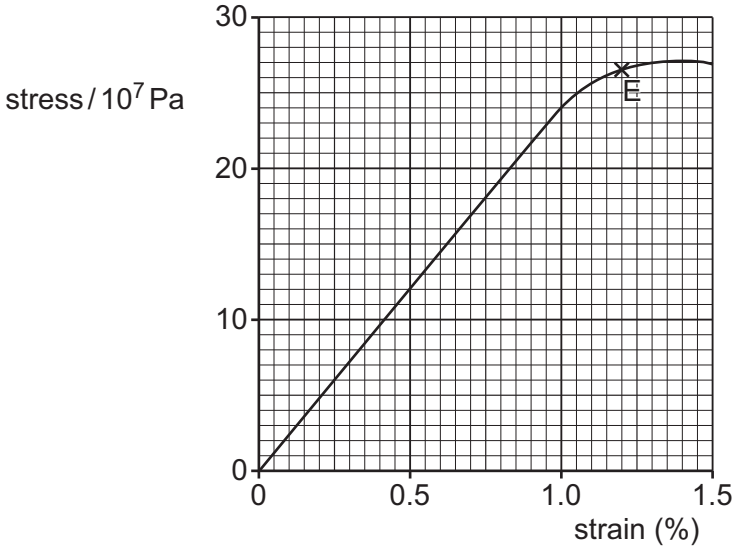

Fig. 3.1

Point E is the elastic limit of the metal.

(i) Use Fig. 3.1 to determine the Young modulus for P.

Young modulus = ... Pa [2]

(ii) On the line in Fig. 3.1, draw a cross (×) to show the limit of proportionality.
Label this point Q. [1]

DO NOT WRITE IN THIS MARGIN
DO NOT WRITE IN THIS MARGIN
DO NOT WRITE IN THIS MARGIN
DO NOT WRITE IN THIS MARGIN
DO NOT WRITE IN THIS MARGIN

(b) State the conditions necessary for an object to be in equilibrium.

.....

.....

..... [2]

(c) A wire is used to hold a uniform shelf AB horizontally in equilibrium as shown in Fig. 3.2.

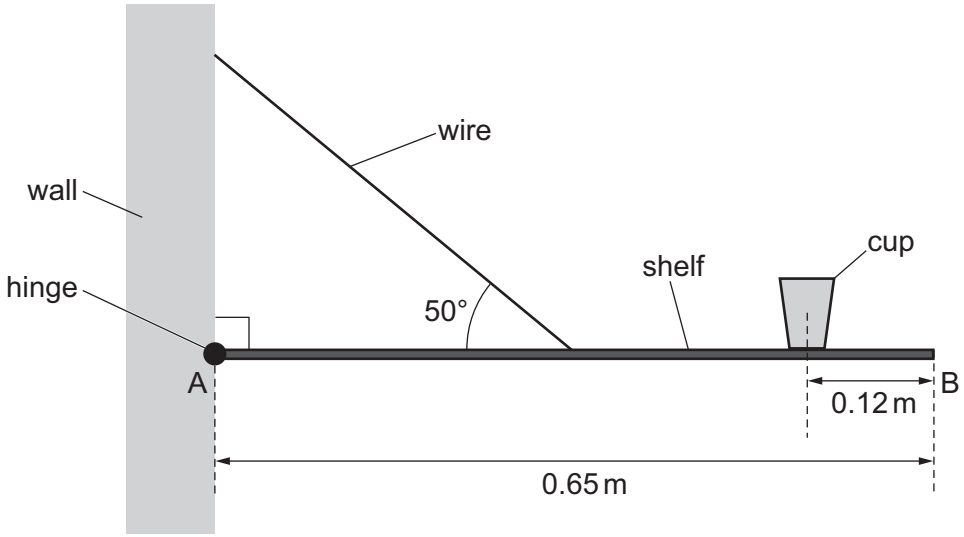

Fig. 3.2 (not to scale)

The wire is connected to the midpoint of shelf AB at an angle of 50° to the horizontal. The shelf is attached to a wall by a hinge at A. The length of shelf AB is 0.65 m and its weight is 33 N.
A cup of weight 1.5 N rests on the shelf with its centre of gravity at a horizontal distance of 0.12 m from B.

(i) By taking moments about A, determine the tension in the wire.

tension = ... N [3]

DO NOT WRITE IN THIS MARGIN
DO NOT WRITE IN THIS MARGIN
DO NOT WRITE IN THIS MARGIN
DO NOT WRITE IN THIS MARGIN
DO NOT WRITE IN THIS MARGIN

(ii) The stress in the wire is 1.5×10^7 Pa.

Determine the radius of the wire.

radius = ... m [2]

(iii) More items are added to the shelf, doubling the stress in the wire. The wire is made of the metal P from **(a)**.

Use Fig. 3.1 to state and explain whether the wire will behave plastically or elastically as the stress doubles.

.....

.....

.....

.....

..... [2]

[Total: 12]

DO NOT WRITE IN THIS MARGIN
DO NOT WRITE IN THIS MARGIN
DO NOT WRITE IN THIS MARGIN
DO NOT WRITE IN THIS MARGIN
DO NOT WRITE IN THIS MARGIN

4 **(a)** With reference to the direction of transfer of energy, compare the oscillations of transverse and longitudinal progressive waves.

.....

.....

.....

..... [2]

(b) A pipe is open at one end and closed at the other with a piston. The piston can slide freely and is at a distance of 4.5×10^{-2} m from the open end of the pipe.

A loudspeaker is positioned near the open end of the pipe and emits a sound wave of a single constant frequency. A stationary wave is formed in the pipe, as illustrated in Fig. 4.1.

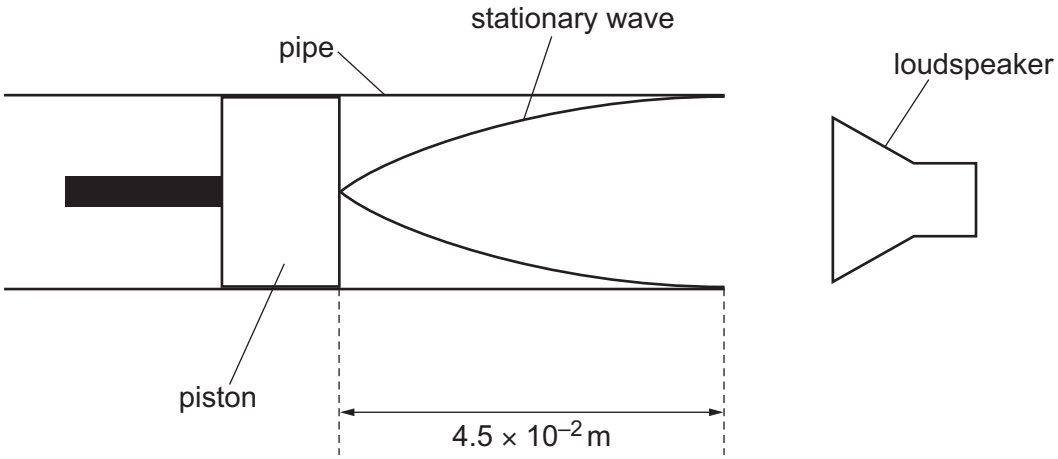

Fig. 4.1

(i) On Fig. 4.1, draw a letter A at the position of an antinode. [1]

(ii) The speed of sound in air is $340\,m\,s^{-1}$.

Determine the frequency of the sound wave.

frequency = ... Hz [3]

DO NOT WRITE IN THIS MARGIN

(iii) The piston is moved to the left. The frequency of the sound wave emitted by the loudspeaker is then changed so that a stationary wave is formed with same number of antinodes as in Fig. 4.1.

State and explain the change that is made to the frequency of the sound wave.

.....

.....

.....

..... [2]

[Total: 8]

DO NOT WRITE IN THIS MARGIN
DO NOT WRITE IN THIS MARGIN
DO NOT WRITE IN THIS MARGIN
DO NOT WRITE IN THIS MARGIN
DO NOT WRITE IN THIS MARGIN

5 **(a)** Define electric potential difference (p.d.).

.....

..... [1]

(b) A power supply, three resistors and a component X are connected in the circuit shown in Fig. 5.1.

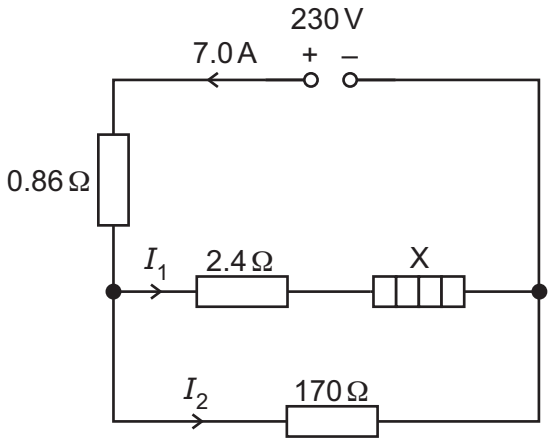

Fig. 5.1

The power supply has an electromotive force (e.m.f.) of 230 V and negligible internal resistance. The current in the power supply is 7.0 A.

(i) Identify component X.

..... [1]

(ii) Show that the p.d. across the resistor of resistance 0.86 Ω is 6.0 V.

[1]

(iii) Determine the current I_1.

I_1 = ...A [2]

DO NOT WRITE IN THIS MARGIN
DO NOT WRITE IN THIS MARGIN
DO NOT WRITE IN THIS MARGIN
DO NOT WRITE IN THIS MARGIN
DO NOT WRITE IN THIS MARGIN

(iv) Calculate the p.d. across component X.

p.d. = ... V [2]

(v) Calculate the power dissipated in component X.

power = ... W [2]

(vi) The purpose of the circuit is to provide power to component X.

Determine the percentage efficiency of the circuit.

efficiency = ...% [2]

(vii) The resistor of resistance 170 Ω is removed, leaving an open circuit in the lower branch of the circuit. There is no change to the resistance of component X.

State whether the current in the power supply increases, decreases or remains the same.

..... [1]

[Total: 12]

DO NOT WRITE IN THIS MARGIN
DO NOT WRITE IN THIS MARGIN
DO NOT WRITE IN THIS MARGIN
DO NOT WRITE IN THIS MARGIN
DO NOT WRITE IN THIS MARGIN

6 **(a)** Compare an α-particle with a β^+ particle in terms of their masses and charges.

.....

.....

.....

.....

..... [3]

(b) Nucleus P undergoes α-decay to form nucleus Q. Nucleus Q then undergoes a further decay to form nucleus R. The proton and nucleon numbers of P and R are shown in Fig. 6.1.

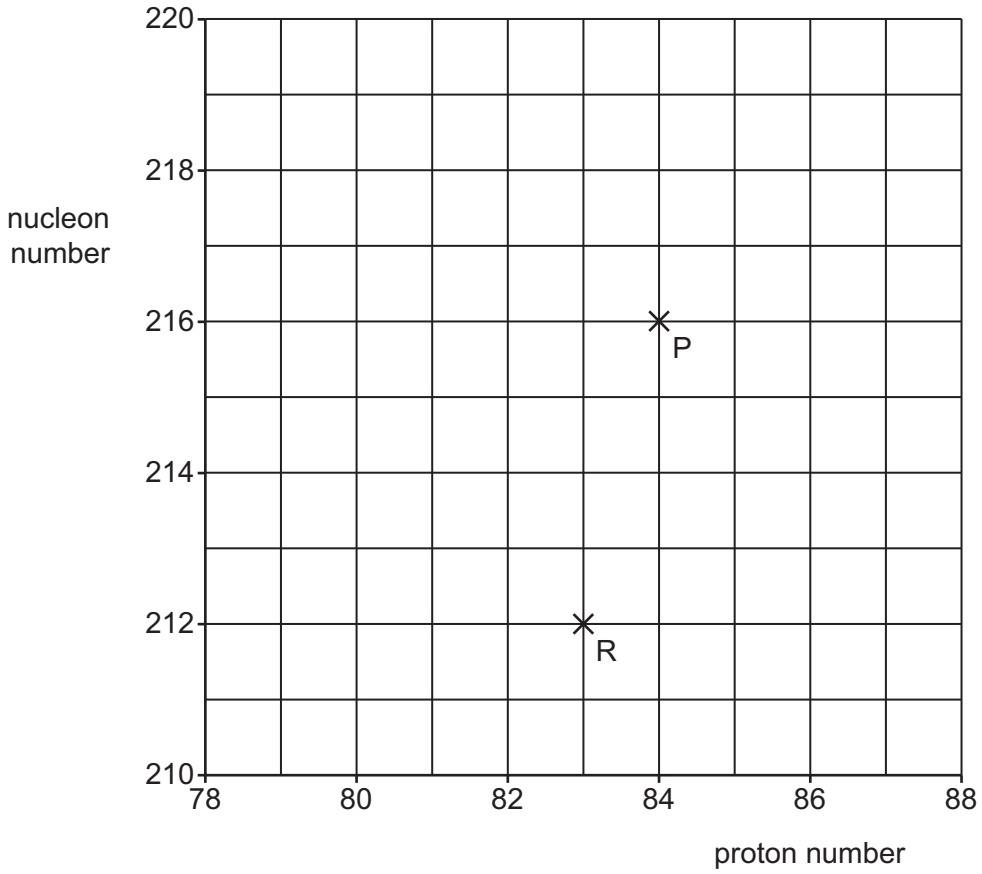

Fig. 6.1

(i) On Fig. 6.1, draw a cross (×) to show the proton number and nucleon number of Q. Label your cross Q. [1]

(ii) State the names of the particles emitted as Q decays to form R.

.....

..... [2]

DO NOT WRITE IN THIS MARGIN
DO NOT WRITE IN THIS MARGIN
DO NOT WRITE IN THIS MARGIN
DO NOT WRITE IN THIS MARGIN
DO NOT WRITE IN THIS MARGIN

DO NOT WRITE IN THIS MARGIN
DO NOT WRITE IN THIS MARGIN
DO NOT WRITE IN THIS MARGIN
DO NOT WRITE IN THIS MARGIN
DO NOT WRITE IN THIS MARGIN

(c) Before the α-decay, P is travelling at a constant velocity. After the decay, Q has a velocity of $1.3 \times 10^5\,m\,s^{-1}$ at an angle of 68° to the original path of P.
The α-particle has a velocity of $150 \times 10^5\,m\,s^{-1}$ at an angle of θ to the original path of P, as shown in Fig. 6.2.

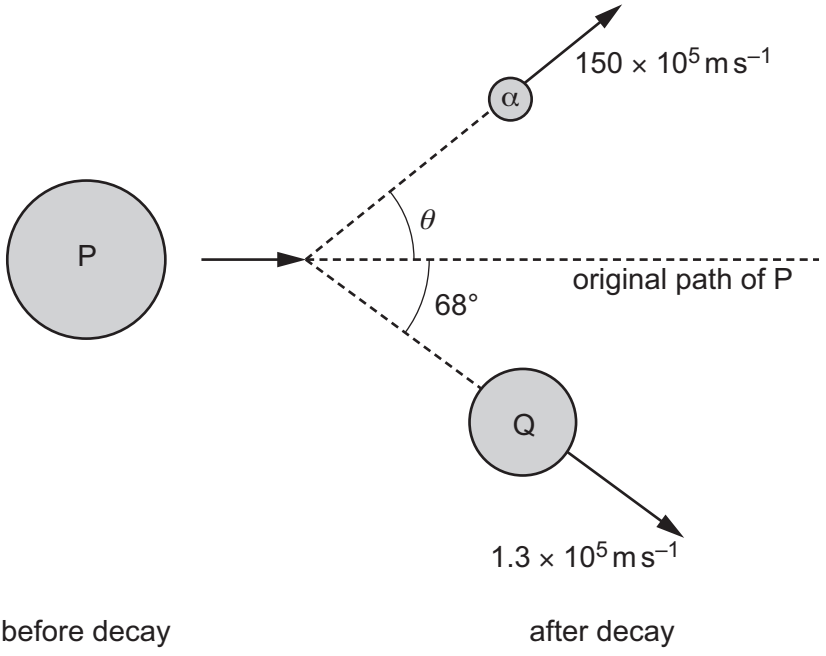

Fig. 6.2 (not to scale)

(i) Use the principle of conservation of momentum to determine θ.

θ = ...° [3]

(ii) Calculate the kinetic energy of the α-particle.

kinetic energy = ... J [2]

[Total: 11]

BLANK PAGE

DO NOT WRITE IN THIS MARGIN
DO NOT WRITE IN THIS MARGIN
DO NOT WRITE IN THIS MARGIN
DO NOT WRITE IN THIS MARGIN
DO NOT WRITE IN THIS MARGIN

Permission to reproduce items where third-party owned material protected by copyright is included has been sought and cleared where possible. Every reasonable effort has been made by the publisher (UCLES) to trace copyright holders, but if any items requiring clearance have unwittingly been included, the publisher will be pleased to make amends at the earliest possible opportunity.

To avoid the issue of disclosure of answer-related information to candidates, all copyright acknowledgements are reproduced online in the Cambridge Assessment International Education Copyright Acknowledgements Booklet. This is produced for each series of examinations and is freely available to download at www.cambridgeinternational.org after the live examination series.

Cambridge Assessment International Education is part of Cambridge Assessment. Cambridge Assessment is the brand name of the University of Cambridge Local Examinations Syndicate (UCLES), which is a department of the University of Cambridge.